fima | CARLO FRATTINI

F3051TWLX9G

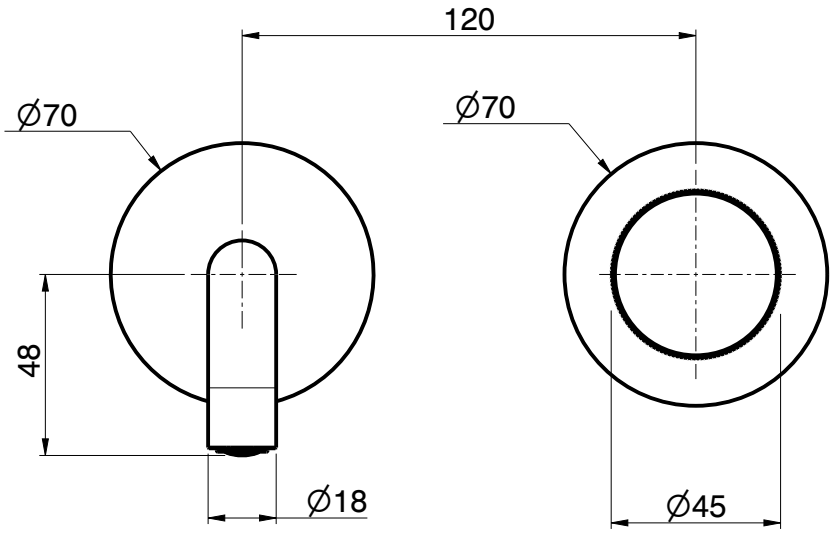

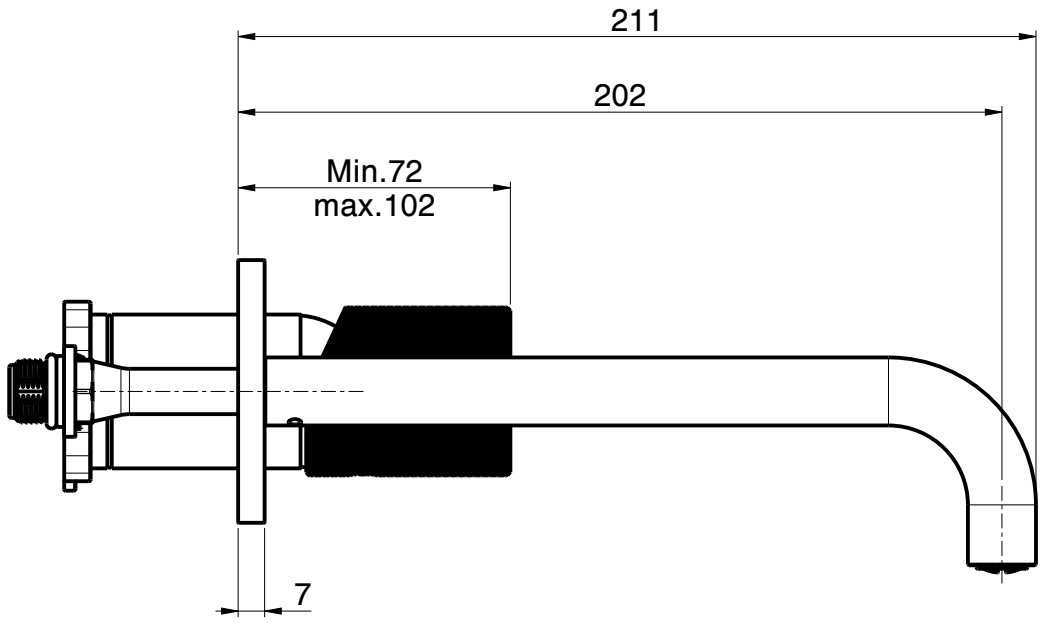

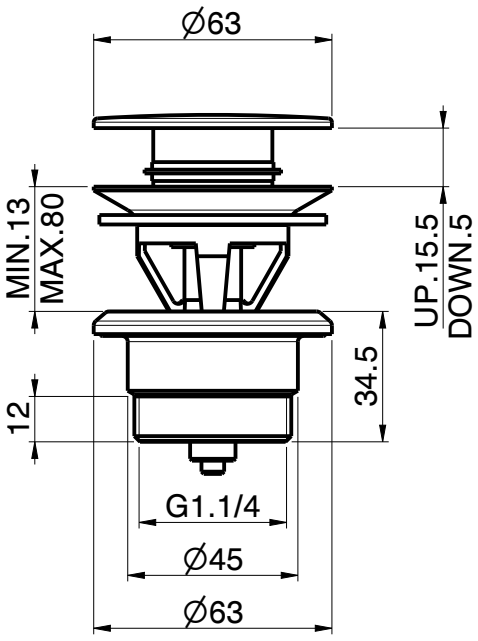

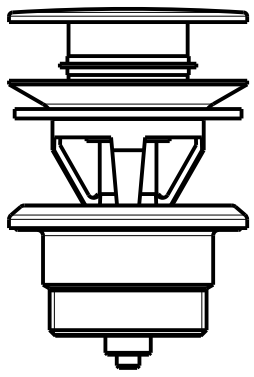

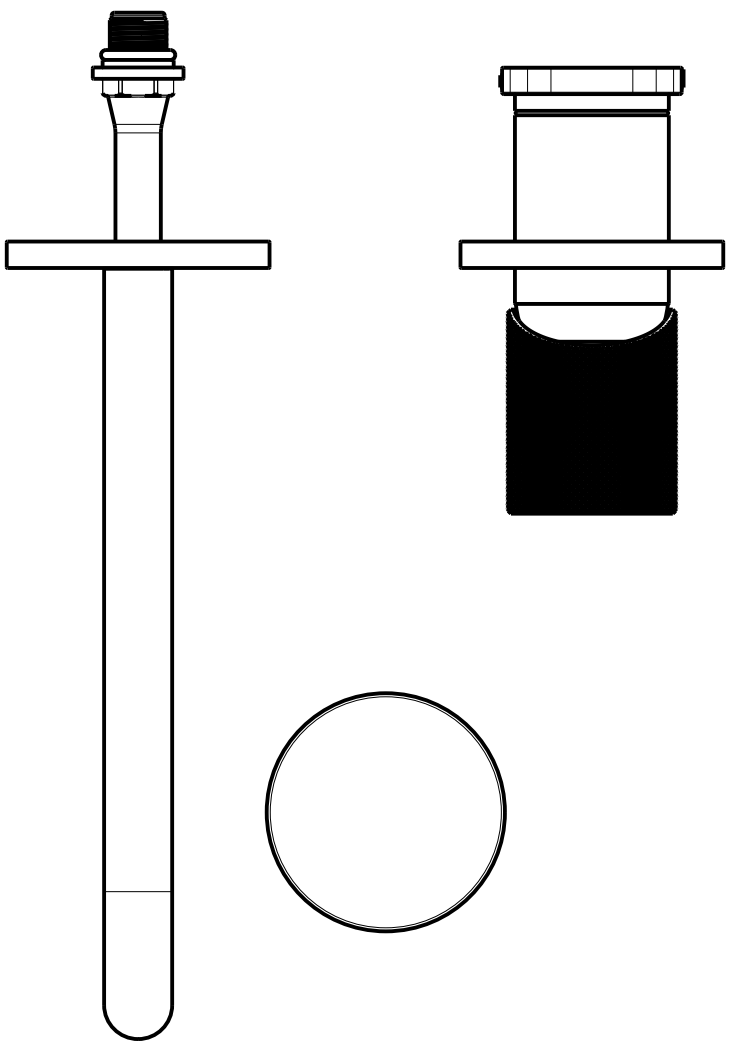

This drawing is the property of FIMA Carlo Frattini. Any complete or partial reproduction, or any transmission to third party without FIMA Carlo Frattini authorization is forbidden.

fima | CARLO FRATTINI rubinetteria

F3051TWLX9V

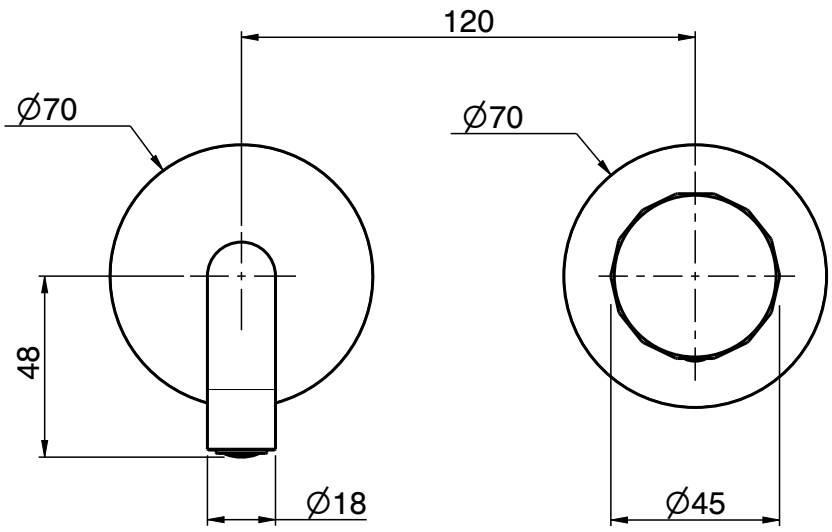

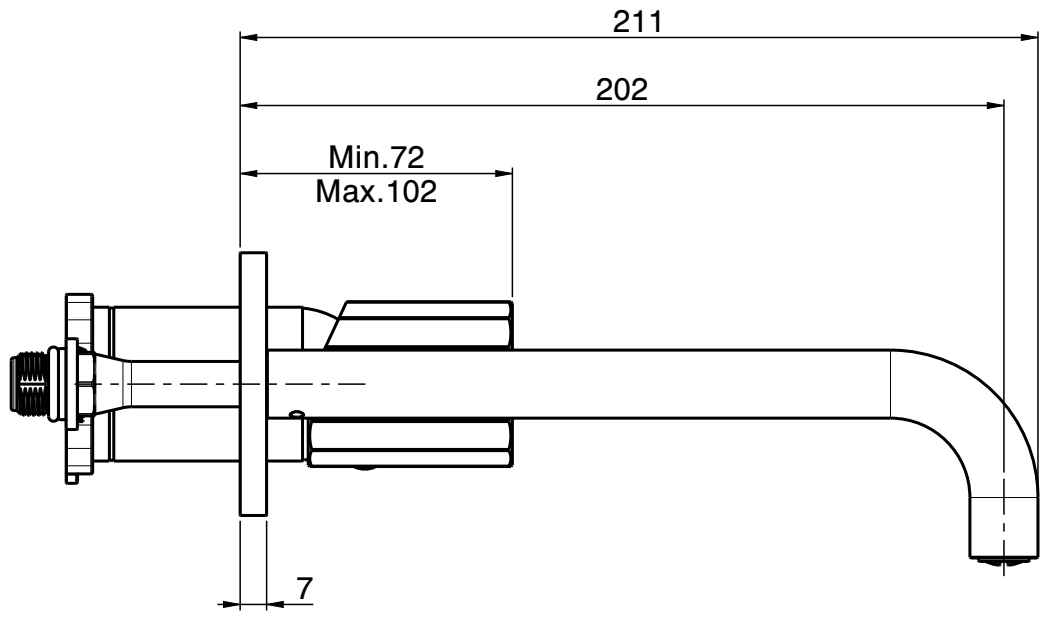

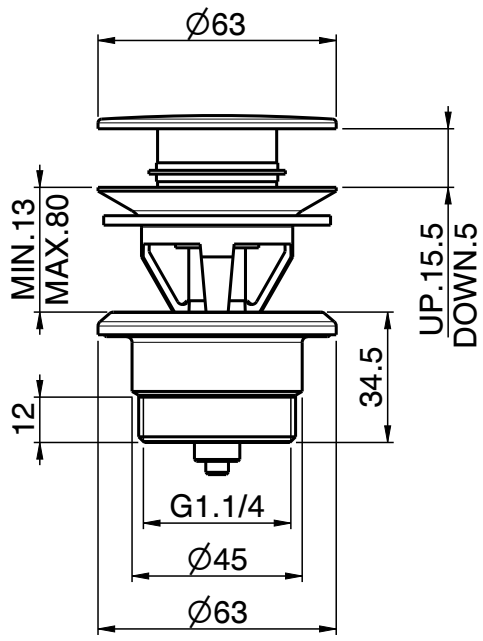

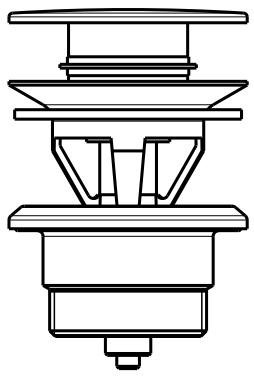

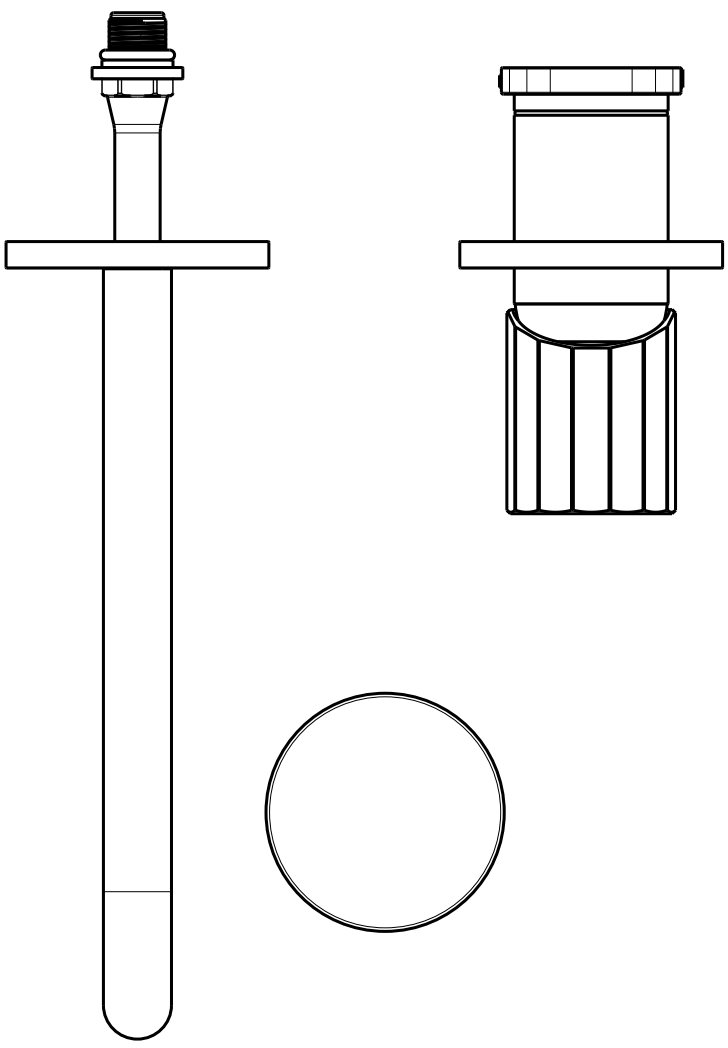

This drawing is the property of FIMA Carlo Frattini. Any complete or partial reproduction, or any transmission to third party without FIMA Carlo Frattini authorization is forbidden.

fima CARLO FRATTINI

F3051TWLX9X

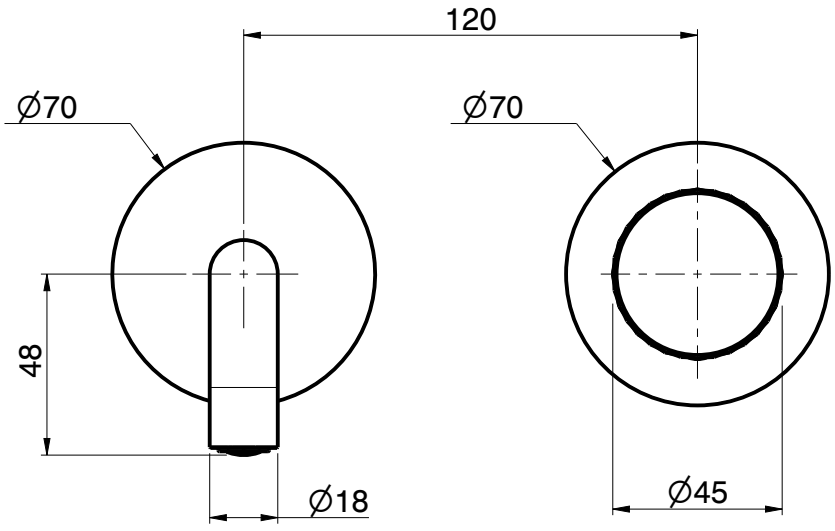

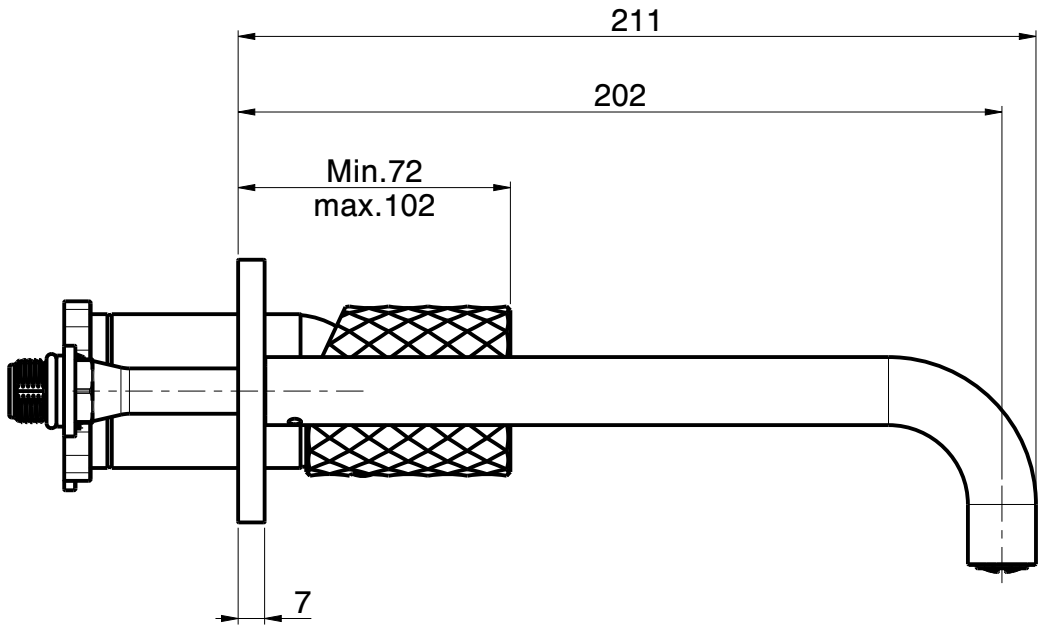

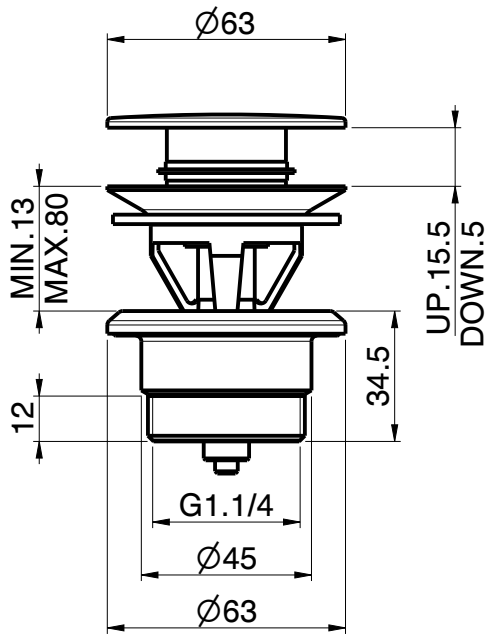

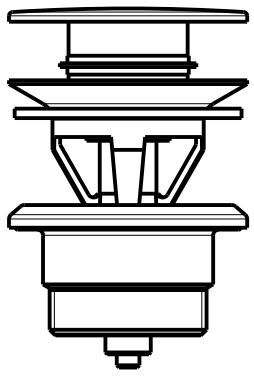

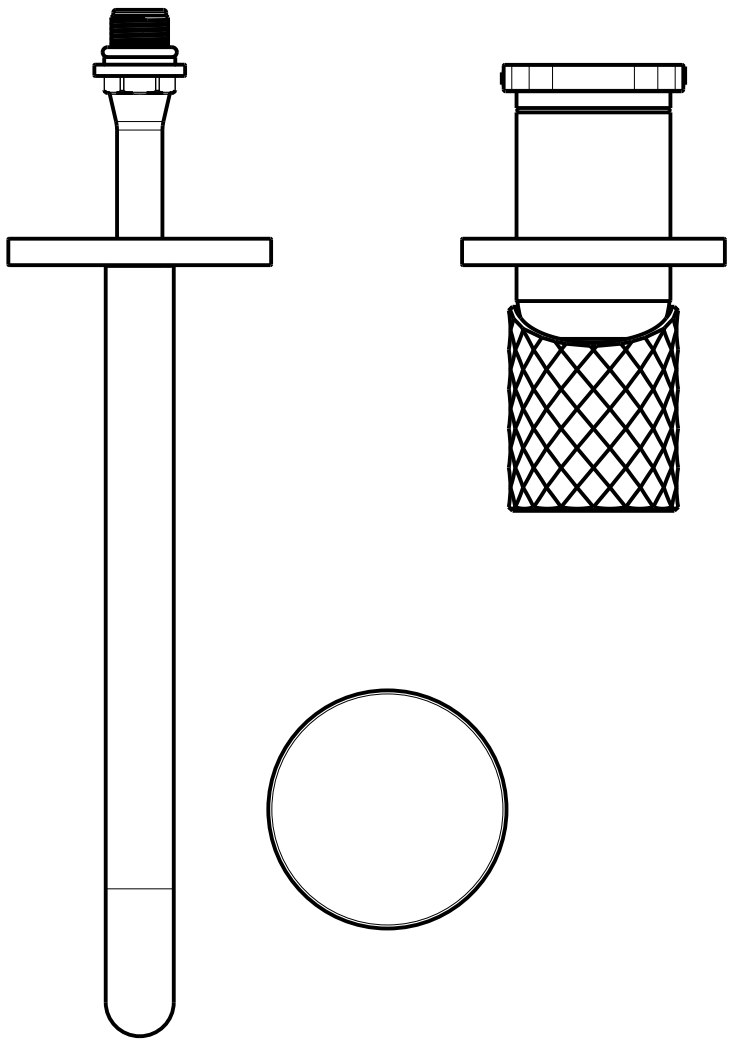

This drawing is the property of FIMA Carlo Frattini. Any complete or partial reproduction, or any transmission to third party without FIMA Carlo Frattini authorization is forbidden.